USER MANUAL

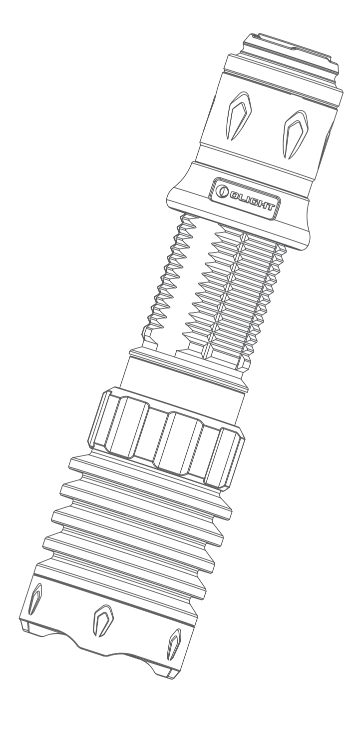

WARRIOR X 4 KIT

A rechargeable, long-range tactical flashlight with a tail switch.

IN THE BOX

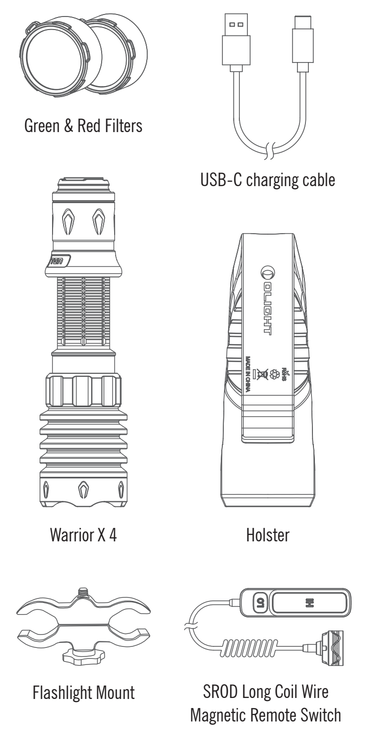

Table 1:
Specification

COOL WHITE CCT: 5700～6700K CRI:70

REGULAR MODE

Mode	Output	Runtime
HIGH 2,600 lumens	100% → 38% → 12%	3min / 140min / 20min
LOW 300 lumens	100%	8h

TACTICAL MODE

Mode	Output	Runtime
MEDIUM 1,000 lumens	100% → 30%	150min / 20min
STROBE 13Hz@2600 lumens		330min

99,310cd	630m	2m
IPX8	249g / 8.78oz (Including Battery)	Working temperature 0-40°C
(L)149 * (D) 39.5mm (L)5.87 * (D) 1.56in	Rechargeable Li-ion Battery 5000mAh 3.6V (18Wh)	

** Above data are tested per ANSI/NEMA FL 1-2009 standard in Olight's labs for reference.*

Table 2:
USB-C charging cable

Charge Type	USB-C
Cable length	0.8m
Input	5V/2A
Time to fully charge	About 3.5 hours

MCC (Optional Accessory)

Cable length	0.5m
Input	5V/2A
Output	CC&CV 4.2V±0.05V 2.0A
Time to fully charge	About 5 hours

Note: The MCC is not included in the package. If necessary, please purchase it from Olight Store.

Figure 1
Remove the insulating film

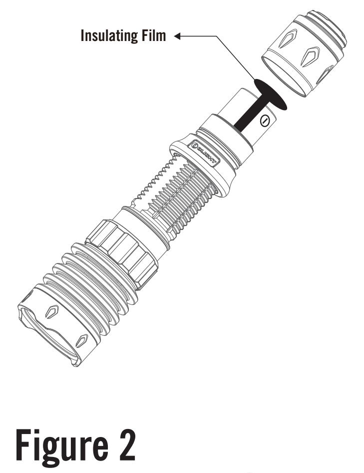

Figure 2
Charge

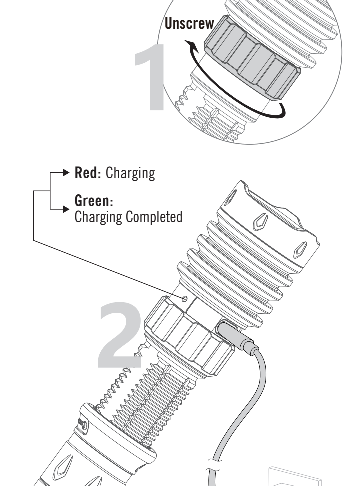

Figure 3
Magnetic Remote Switch

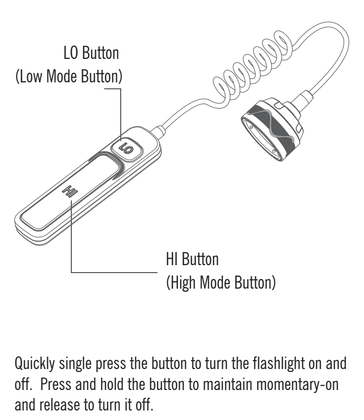

Quickly single press the button to turn the flashlight on and off. Press and hold the button to maintain momentary-on and release to turn it off.

Regular Mode
Figure 4
Turn on/off Low mode (1):

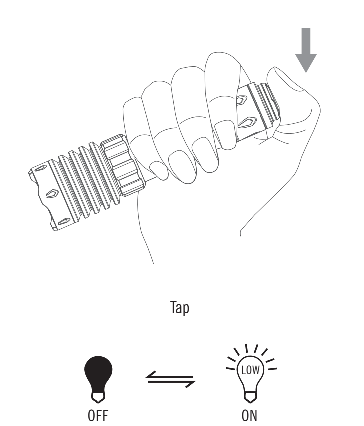

Figure 5
Turn on/off Low mode (2):

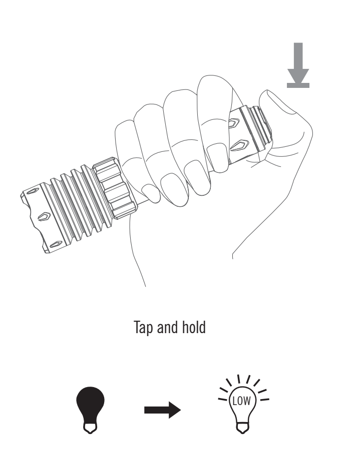

Figure 6
Turn on/off High mode (1):

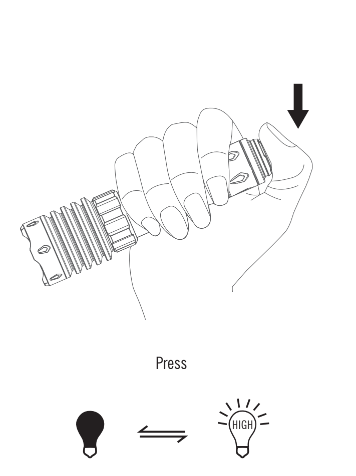

Figure 7
Turn on/off High mode (2):

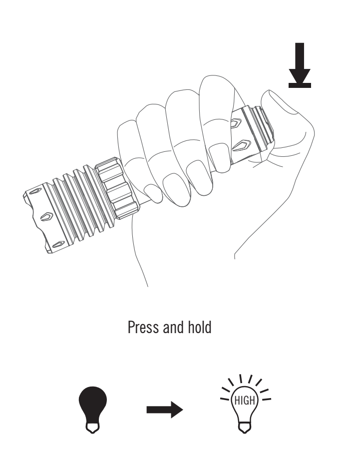

Figure 8
Switch to High mode:

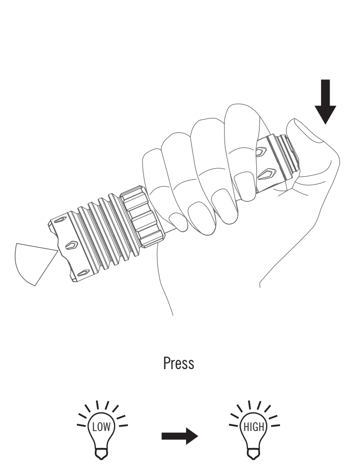

Figure 9
Switch between Regular and Tactical modes:

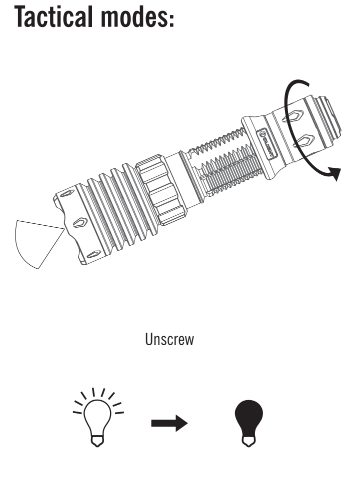

Tactical Mode
Figure 10
Turn on/off Mid mode (1):

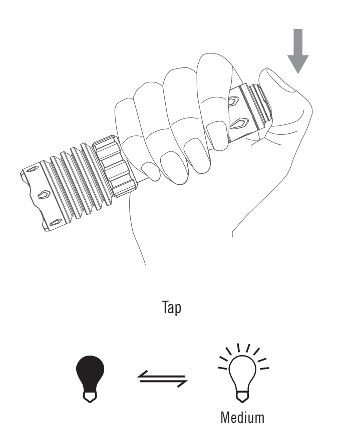

Figure 11
Turn on/off Mid mode (2):

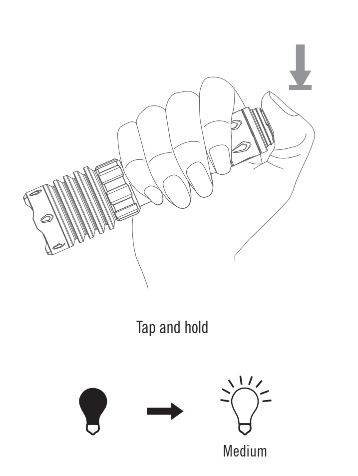

Figure 12
Turn on/off Strobe (1):

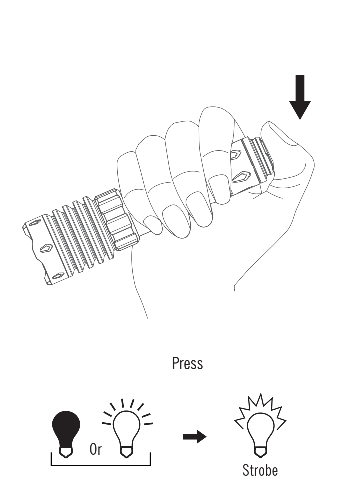

Figure 13
Turn on/off Strobe (2):

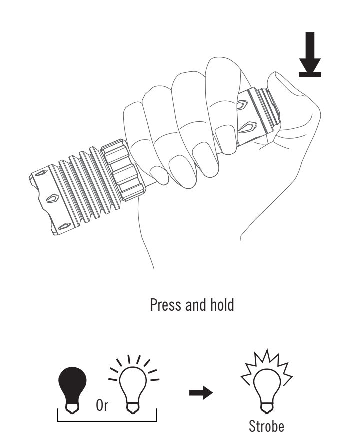

Figure 14
Battery level indicator

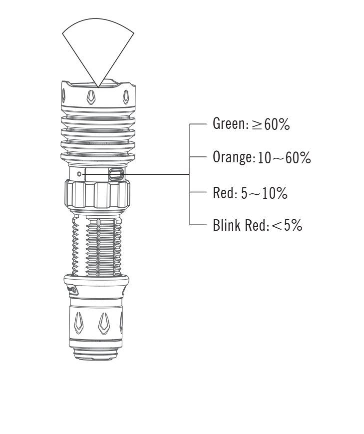

CONTENTS

(EN) English 01
(CN) 简体中文 01
(FI) Finnish 02
(NO) Norwegian 03
(SV) Swedish 04
(NL) Nederlands 05
(PL) Polska 06
(DE) Deutsch 07
(HU) Magyarország 08
(RU) Русский 09
(ES) Español 10
(RO) Românesc 11
(UA) Ukrainian 12
(JP) 日本語 13
(KR) 한국어 15
(TH) ไทย 16
(FR) Français 17
(IT) Italiano 18
(SK) Slovenskýjazyk 19
(PT) Português 20

(EN) English

Multi-language dictionary, see Table 3.

1. Product specification, see Table 1 and Table 2;
2. Operating instructions as below:

2.1 Remove the insulating film, see Figure 1;

2.2 Charge, see Figure 2;

2.3 **Magnetic Remote Switch, see Figure 3;**
Quickly single press the button to turn the flashlight on and off. Press and hold the button to maintain momentary-on and release to turn it off.

3. Tail switch operating instructions as below:

3.1 **Regular Mode**

3.1.1 **Turn on/off Low mode (1):**
Tap to turn on Low mode, tap again to turn off, see Figure 4;

3.1.2 **Turn on/off Low mode (2):**
Tap and hold to turn on and maintain Low mode, release the button to turn off, see Figure 5;

3.1.3 **Turn on/off High mode (1):**
Press to turn on High mode, press again to turn off, see Figure 6;

3.1.4 **Turn on/off High mode (2):**
Press and hold to turn on and maintain High mode, release the button to turn off, see Figure 7;

3.1.5 **Switch to High mode:**
In Low mode, press to switch to High mode, see Figure 8;

3.2 **Switch between Regular and Tactical modes:**
In the on state, unscrew the tail cap until the light goes out to switch to Tactical mode, then tighten the tail cap. Repeat the operation to return to Regular mode, see Figure 9;

3.3 **Tactical Mode**

3.3.1 **Turn on/off Mid mode (1):**
Tap to turn on Mid mode, tap again to turn off, see Figure 10;

3.3.2 **Turn on/off Mid mode (2):**
Tap and hold to turn on and maintain Mid mode, release the button to turn off, see Figure 11;

3.3.3 **Turn on/off Strobe (1):**
Press to turn on Strobe, press again to turn off, see Figure 12;

3.3.4 **Turn on/off Strobe (2):**
Press and hold to turn on and maintain Strobe, release the button to turn off, see Figure 13;

3.4 Battery level indicator, see Figure 14;

(CN) 简体中文

多语言字典，参见 Table 3;

1. 产品参数参见 Table 1与Table 2;
2. 操作指引见下:

2.1 使用前移除绝缘片，参见Figure 1;

2.2 充电，参见Figure 2;

Table 3
Multi-language dictionary

EN	Low	Medium	High	Strobe	Tap	Tap and hold	Press	Press and hold	Unscrew
CN	低档	中档	高档	爆闪	轻按	轻按保持	单击	长按	拧开
FI	Low-tila	Medium-tila	High-tila	Strobo	Napauta	Napauta ja pidä painettuna	Napauta	Paina ja pidä painettuna	Ruuvaa irti
NO	Lav modus	Medium modus	Høy modus	Blink modus	Trykke på	Trykk og hold	Trykk	Hold inne	Skru av
SV	Lågläge	Mellanläge	Högt läge	Blixt läge	Trycka på	Tryck och håll	Tryck	Tryck och håll	Skruva loss
NL	Lage Modus	Gemiddelde Modus	Hoge Modus	Stroboscoop	Tik	Tik en houd vast	Druk	Houd ingedrukt	Schroef los.
PL	Tryb niski	Tryb średni	Tryb wysoki	Strobe	Dotknij	Dotknij i przytrzymaj	Naciśnij	Naciśnij i przytrzymaj	Odkręcić
DE	Niedriger Modus	Mittlerer Modus	Hoher Modus	Strobe	Halb drücken	Halb gedrückt halten	Drücken	Gedrückt halten	Drehen
HU	Alacsony mód	Közepes mód	Magas mód	Stroboszkóp	Érintés	Érintés és tartás	Megnyomás	Nyomva tartás	Csavarja ki
RU	Минимальный режим	Средний режим	Максимальный режим	Режим стробоскоп	Нажмите	Нажмите и удерживайте	Нажмите	Нажмите и удерживайте	отвинтить
ES	Modo de potencia baja	Modo de potencia media	Modo de potencia alta	Estroboscópico	Pulse	Pulse y mantenga	Presione	Mantenga presionado	Desenroscar
RO	Mod mic	Mod mediu	Mod mare	Stroboscop	Atingeți	Atingeți și țineți apăsat	Apăsare	Apăsați și mențineți apăsat	Desurubati
UA	Режим Low	Режим Medium	Режим High	Режим стробоскопа	Натисніть	Натисніть і утримуйте	Прес	Натисніть і утримуйте	Відкрутіть
JP	ローモード	ミディアムモード	ハイモード	ストロボモード	タップ	押したまま	プレス	押したまま	ネジを緩める
KR	로우 모드	미디엄 모드	하이 모드	스트로브	탭하기	탭한 채로 유지하기	누르기	길게 누르기	나사 풀기
TH	โหมดความสว่างต่ำ	โหมดความสว่างปานกลาง	โหมดความสว่างสูง	กระพริบ	กดเบาๆ	กดเบาๆค้างไว้	กด	กดค้างไว้	คลายเกลียว
FR	Mode Faible	Mode Moyen	Mode Haut	Stroboscope	Appuyer légèrement	Appuyer légèrement et maintenir	Appuyer	Appuyer fortement et maintenir	Dévissez
IT	Modalità bassa	Modalità media	Modalità alta	Strobo	Premi	Premi e tieni premuto	Premere	Premere e tenere premuto	Svitare
SK	slaby režim	stredný režim	vysoky režim	stroboskop	Klepnite	Kliknite a podržte	Stlačenie	Stlačenie a podržanie	Odšrobovať
PT	Modo baixo	Modo Médio	Modo alto	Strobo	Tocar	Tocar e manter	Pressionar	Manter pressionado	Desenroscar

WARRANTY

Within 30 days of purchase: Contact the original seller for repair or replacement.

Within 5 years of purchase: Contact Olight for repair or replacement.

Battery Warranty: Olight offers a one year warranty for all rechargeable batteries.

If you experience quality problems or damage with low-value fittings like lanyards or clips within 30 days of purchase under normal use conditions, please contact our after-sale service. For issues that occur after 30 days or for damage caused by abnormal use conditions, we provide a conditional quality assurance as appropriate.

USA Customer Support
cs@olightstore.com

Global Customer Support
contact@olightworld.com

Visit **www.olightworld.com** to see our complete product line of portable illumination tools.

Dongguan Olight E-Commerce Technology Co., Ltd.
4th Floor, Building 4, Kegu Industrial Park, No 6 Zhongnan Road, Changan Town, Dongguan City, Guangdong, China.
Made in China

CAN ICES-005 (B) / NMB-005 (B)

3.4000.0636 A. 7, 17, 2023